Linchpin DIN 11023

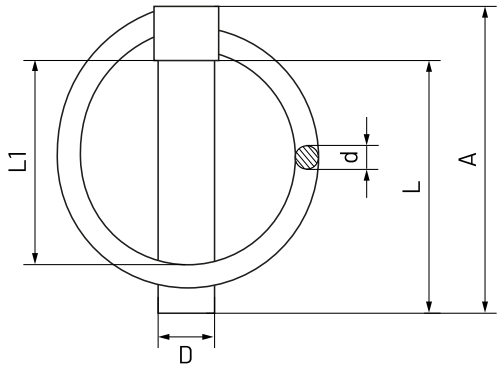

The DIN 11023 linch pin is a zinc-plated steel locking pin designed for quick, secure, and reusable fastening in agricultural, industrial, and transportation applications. Also known as a ring pin, agricultural linch pin, or hitch locking pin, this component provides a reliable quick-release solution for trailers, axles, agricultural machinery, couplings, and construction equipment.

Its pivoting ring mechanism enables fast installation and removal without tools, ensuring a firm hold even under continuous vibration and movement. This makes the DIN 11023 ring pin ideal for demanding environments where safety, speed, and durability are essential.

**This linch pin fully complies with the international DIN 11023 standard.*

Key features:
• Quick-lock ring system: Fast and tool-free installation for secure locking.
• Zinc-plated steel construction: Excellent mechanical strength and corrosion resistance.
• Versatile applications: Perfect for trailers, agricultural machinery, hitch systems, and industrial couplings.

MATERIAL: C60 steel
FINISH: Zinc plated

Part Number	Ø D size	Denomination	L mm	L1 mm	d mm	A mm	Box Quantity	Outer Box Quantity
01107001	4,5	PASAN45	36	32	2,5	44,5	100	3000
01107003	6,0	PASAN6	45	38	3,0	54,0	100	3000
01107005	7,0	PASAN7	45	38	3,0	55,0	100	2000
01107007	8,0	PASAN8	45	38	3,0	56,0	50	2000
01107009	9,0	PASAN9	45	38	3,5	57,0	50	600
01107011	10,0	PASAN10	45	38	3,5	57,0	50	600
01107013	11,0	PASAN11	45	38	3,5	57,0	50	300
01107015	12,0	PASAN12	45	38	3,5	58,0	50	200
01107017	12,0	PASAN12	70	63	3,5	83,0	25	25
01107019	16,0	PASAN16	60	53	3,5	74,0	25	25

— These items are for industrial use: cable and chain connection **(They are not Personal Protective Equipment - PPE)** —